STANDARD ULTRASONIC IMMERSIBLE
MOUNTING AND LEAD-OUT STYLES

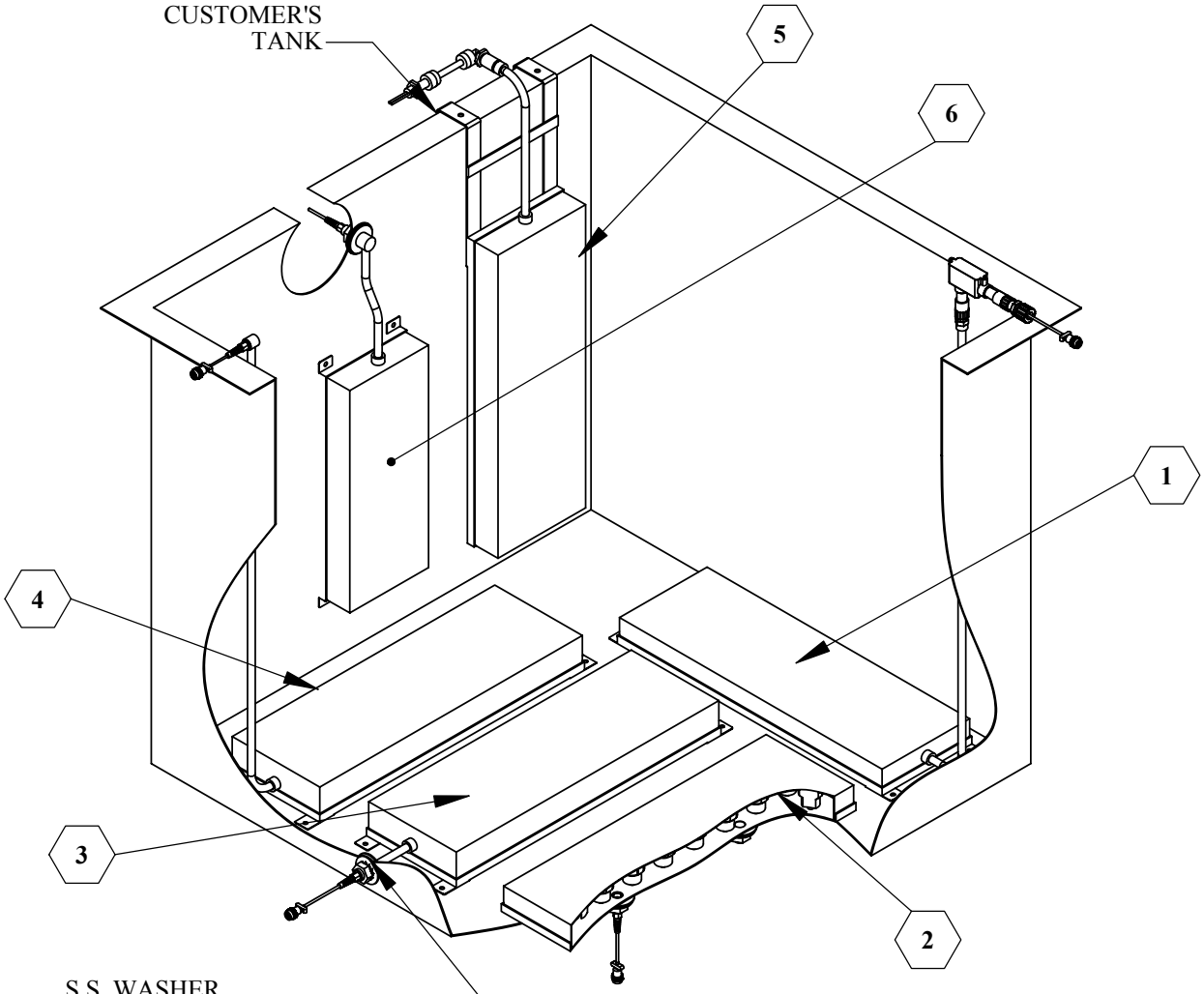

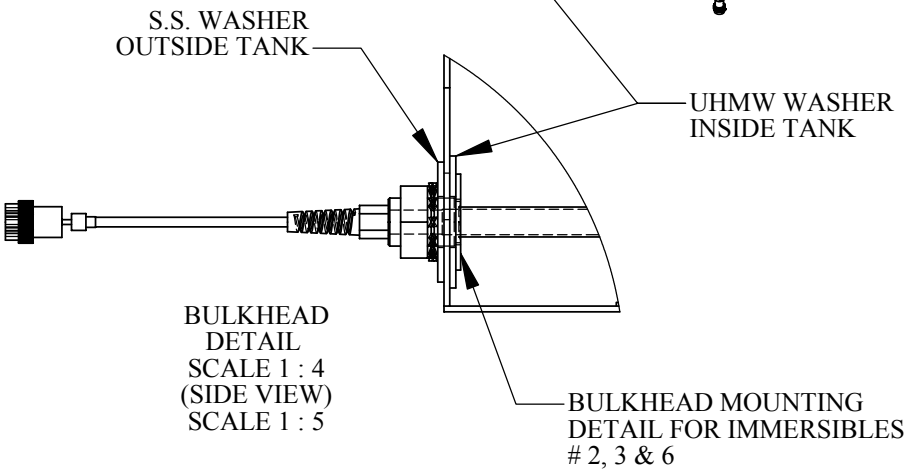

IMMERSIBLE TYPES:

1. BOTTOM MOUNTED WITH OVER THE TOP PIPE & PVC LB JUNCTION BOX
2. BOTTOM MOUNTED WITH DUAL BULKHEAD
3. BOTTOM MOUNTED WITH SINGLE BULKHEAD
4. BOTTOM MOUNTED WITH OVER THE TOP PIPE
5. SIDE MOUNTED WITH OVER THE TOP PIPE
6. SIDE MOUNTED WITH BULKHEAD THRU. SIDE WALL